Low-Cost Cyber-Physical Architecture for Monitoring Industrial DC Electrical Signals

Mauricio Aarón Pérez-Romero, Jacobo Sandoval-Gutiérrez, and Miguel Hernández-Bolaños

***Abstract*—The article describes the development and pilot testing of a low-cost platform for industrial direct current signal monitoring using open technologies and standardized analog signal ranges. The solution is based on a Raspberry Pi 5 processor, MCC-128 DAQ-HAT acquisition module, HW-685 universal transducers, and *ThingSpeak* as a cloud platform for data visualization. The proposed architecture was experimentally evaluated through 21 trials involving pressure, level, and temperature measurements in the Multilazo pilot plant. The comparison with the independently recorded measurements of the plant's monitoring system showed small differences and a strong linear correlation between both datasets. These results demonstrate the feasibility of the architecture for local and remote monitoring under the evaluated conditions, although a complete measurement uncertainty assessment and long-term industrial reliability evaluation remain pending. The proposed system represents a low-cost and adaptable alternative for technical education, applied research, and industrial monitoring applications with limited resources.**

Link to graphical and video abstracts, and to code:
https://latamt.ieeer9.org/index.php/transactions/article/view/11118

***Index Terms*—Cyber-physical systems, data acquisition, remote monitoring, Raspberry Pi, low cost, ANSI/ISA 50.00.01 standard.**

I. Introduction

MONITORING of physical quantities is one of the most important areas of activity of modern industry, as the functioning of production processes and objects, as well as the quality of manufactured products, directly depends on the availability of information about them [1]. Physical quantities such as pressure, temperature, and fluid level must be continuously measured and recorded to ensure safety, efficiency, and compliance with current regulations [2].

Some limitations of industrial systems involve the economic investment required when commercial data acquisition systems depend on proprietary software, expensive licenses, and closed architectures, which hinders their adoption in constrained scenarios. Furthermore, the integration of low-cost monitoring architectures with industrial instrumentation requires compatibility with conventional analog signal ranges, such as 4–20 mA and 1–5 VDC, as specified in ANSI/ISA 50.00.01. This compatibility facilitates the acquisition of signals from industrial transmitters without implying formal certification or full compliance with all requirements of the standard.

In this context, the alternative of Cyber-Physical Systems (CPS) for industrial applications is relevant to integrate sensors, actuators, computational processing, and communication within intelligent architectures [3]. CPS represent the evolution of traditional embedded systems and are considered one of the key technologies of Industry 4.0, enabling supervision and control through interconnected platforms [4].

Recent advantages in CPS arise from the growth of open-source hardware and software platforms, such as Raspberry Pi and various data acquisition (DAQ) modules, which have democratized access to digital instrumentation tools [5]. These technologies enable the development of economical, flexible, and scalable monitoring architectures, particularly useful in educational environments, research laboratories, or industrial processes with limited economic resources [6], [7].

Several authors have addressed the design and implementation of CPS in industrial, educational, and research contexts, with emphasis on device connectivity, data visualization, and the adoption of open architectures. For example, [8] proposes the use of cloud architectures to integrate smart devices into complex CPS, while [9] highlights the advantages of cyber-physical production systems (CPPS) in intelligent industrial processes, characterized by their connectivity, intelligence, and responsiveness.

From an educational and low-cost perspective, multiple works have explored the use of development boards such as Raspberry Pi or ESP32 in combination with open platforms for rapid prototyping. In [10], it was demonstrated that these tools are effective for strengthening programming skills and computational thinking at formative levels, while [11] proposed a FritzBot-based architecture that allows users to design CPS prototypes with reduced configuration effort.

Research projects in the industrial field have explored the implementation of cyber-physical systems using different architectures and computational approaches. For example, [12] examined the barriers to adopting cyber-physical systems in manufacturing organizations, highlighting the challenges associated with their industrial implementation. Similarly, [13] applied deep learning techniques to data acquired from industrial sensors in CPPS, enabling the implementation of predictive maintenance strategies.

The integration of low-cost acquisition hardware with con-

The associate editor coordinating the review of this manuscript and approving it for publication was Gabriel Pinto (*Corresponding author: Mauricio Aarón Pérez Romero).*

Mauricio Aarón Pérez Romero is with the Escuela Superior de Ingeniería Mecánica y Eléctrica, Zacatenco, Instituto Politécnico Nacional, Mexico City, Mexico (e-mail: maperezro@ipn.mx).

J. Sandoval-Gutiérrez is with the Universidad Autónoma Metropolitana, Unidad Lerma, Estado de México, Mexico (e-mail: j.sandoval@correo.ler.uam.mx).

M. Hernández-Bolaños is with the Centro de Innovación y Desarrollo Tecnológico en Cómputo, Instituto Politécnico Nacional, Mexico City, Mexico (e-mail: mbolanos@ipn.mx).

ventional industrial instrumentation requires a signal conditioning and processing architecture capable of handling standardized analog signals. In addition to acquiring these signals, the architecture must support their conversion into engineering units, local recording, and remote visualization to enable the monitoring of industrial process quantities. These requirements provide the technical basis for the cyber-physical architecture developed and evaluated in this work.

Accordingly, the proposed cyber-physical architecture integrates a Raspberry Pi 5 for processing, an MCC-128 DAQ-HAT for acquisition, HW-685 transducers for signal conditioning, and the *ThingSpeak* platform for cloud visualization.

In this sense, the main contribution of this work is the implementation and experimental evaluation of a low-cost cyber-physical architecture capable of acquiring, recording, and remotely visualizing industrial analog signals.

The architecture integrates commercially available hardware and open technologies, maintaining compatibility with standardized industrial signal ranges. Its development is particularly oriented toward educational environments, applied research, and micro and small enterprises requiring basic monitoring capabilities with limited initial investment.

II. System Architecture Design

The proposed cyber-physical architecture was designed to acquire industrial direct current signals, process them locally, and enable both local and remote visualization. It is based on a modular structure that adapts to different monitoring environments, whether in laboratories, pilot plants, or industrial facilities.

The system is composed of three functional levels: the physical level, which includes the transduction stage with standardized analog outputs (4–20 mA, 1–5 VDC, or 0–10 VDC); the acquisition and processing level; and the visualization and management level, which includes local interfaces (HDMI display, physical alerts) and cloud visualization (see Fig. 1). The acquisition stage uses a 16-bit analog-to-digital converter configured in differential mode, with three channels assigned to pressure, level, and temperature measurements. The architecture also supports local data storage and remote visualization through the cloud platform.

The Raspberry Pi 5 was selected as the processing unit because of its relatively low cost, Linux-based operating system, and computational capabilities. The MCC-128 DAQ-HAT board was used for analog signal acquisition. According to the manufacturer's specifications, this module provides 16-bit resolution, eight single-ended or four differential analog input channels, and selectable voltage ranges of ± 10 V, ± 5 V, ± 2 V, and ± 1 V.

For the experimental implementation, three differential channels were configured using the ± 10 V input range. For the acquisition of industrial 4–20 mA signals, HW-685 current-to-voltage converter modules were incorporated into the signal conditioning stage. These modules were adjusted to convert the 4–20 mA input signals into corresponding 1–5 VDC signals, allowing their acquisition through the MCC-128 analog inputs.

In the developed cyber-physical system, different communication protocols were implemented, each associated with a specific stage of the data flow. The transfer of analog data from the MCC-128 DAQ-HAT board to the Raspberry Pi 5 used the SPI (Serial Peripheral Interface) protocol, managed through the DAQ-HAT library.

The transmission of digital data from the Raspberry Pi 5 to the *ThingSpeak* platform was carried out via HTTPS (Hypertext Transfer Protocol Secure), using an API (Application Programming Interface) with a REST (Representational State Transfer) architecture. Alerts generated in *ThingSpeak* were sent to email accounts through the SMTP (Simple Mail Transfer Protocol) protocol integrated into the platform. The local physical alert, consisting of an industrial lamp, was activated through a Raspberry Pi 5 GPIO (General Purpose Input/Output) digital output connected to a power interface.

Fig. 2 shows a visual representation of the system architecture, including the components involved and the communication protocols and digital interfaces used for their interaction.

The system was assembled in an industrial cabinet to provide mechanical protection and organized wiring for its components. Inside the cabinet, two regulated power supplies were installed: a 24 VDC source to power the industrial transducers and control stages, and a 12 VDC source for auxiliary circuits. At the top, connection clamps were arranged to facilitate wiring management and provide reliable connections between the internal components. In the lower section, active HW-685 transducers were mounted to adapt 4–20 mA current signals to voltage ranges compatible with the acquisition stage. The Raspberry Pi 5, together with the MCC-128 DAQ-HAT board, was installed as the computational and acquisition core of the system. For local field operation, a 7" HDMI display and control peripherals were integrated, enabling real-time interaction with the system without the need for an external computer (see Fig. 3).

III. Experimental Validation

The proposed architecture was validated under operating conditions at the Multilazo industrial instrumentation pilot plant (a commercial multiloop training and experimental facility), located at the Escuela Superior de Ingeniería Mecánica y Eléctrica, Unidad Zacatenco, of the Instituto Politécnico Nacional (ESIME ZAC-IPN), Mexico City (see Fig. 4). This test plant, designed and manufactured by IMEPI S.A. de C.V., is equipped with industrial-grade instrumentation, standardized connections, and conditions similar to real field operation. The measurement instruments used as references had valid calibration certificates at the time of the experimental trials.

The experimental evaluation comprised 21 trials of varying duration, conducted during regular academic activities involving the operation of the Multilazo pilot plant. Pressure, level, and temperature were monitored simultaneously in each trial. The operating conditions varied according to the activities performed, rather than following a predefined experimental sequence. Measurements acquired by the proposed architecture were compared with the corresponding readings recorded by the Multilazo monitoring system.

Both monitoring systems independently recorded measurements with their corresponding date and time information. For

each trial, the comparative analysis considered the response curves recorded by both systems from the beginning of the pilot plant operation. The resulting datasets were subsequently consolidated into spreadsheets for comparison of the recorded measurements and their temporal behavior. The Multilazo monitoring software stored measurements with two decimal places, whereas the proposed architecture retained additional decimal places in its recorded data.

In the data acquisition process of the system, each sample was locally stored in CSV format and processed through a Python script that applied offset and gain correction, and converted voltage values into engineering units according to the linear relationships defined for each transmitter, consistent with the standardized analog signal ranges described in ANSI/ISA 50.00.01. The offset and gain corrections were intended to compensate for systematic deviations in the acquisition channels. However, these linear corrections do not account for possible nonlinearities, hysteresis, or variations in sensor and transmitter response across their operating ranges. Consequently, their application does not independently demonstrate measurement accuracy over the entire measurement range, which would require additional calibration and verification at multiple measurement points.

The pseudocode in Algorithm 1 describes this acquisition flow. It includes the sequential reading of the configured channels, the application of calibrations, the conversion to engineering units, and the local logging of data. In addition, it considers the optional activation of a local physical alert through a digital output (GPIO) when a variable exceeds a defined threshold.

The second stage of the system corresponds to the transmission of the acquired variables to the ThingSpeak cloud visualization platform. Due to the limitation of the free plan of this platform, data transmission was configured to run every 15 seconds, establishing a transmission frequency of approximately 0.0667 Hz. In each transmission cycle, the system retrieves the latest measurement locally recorded by the acquisition stage and prepares it in a format compatible with the *ThingSpeak REST API*.

Algorithm 1 DC Signal Acquisition

INIT()
$DAQ_RANGE \leftarrow \pm 10$ V
$T_s \leftarrow 15$ s
`load DAQ-HAT; open MCC-128;` set differential input and range DAQ_RANGE
Define channel list $C = \{c_k\}_{k=1}^{K}$, each c as tuple $(ch, v_{\min}, v_{\max}, x_{\min}, x_{\max}, \Delta v, g, name)$

LOOP()
repeat
$t \leftarrow$ NOW()
`reg` $\leftarrow \{timestamp : t\}$
for each $c \in C$
$v_{raw} \leftarrow$ DAQ_READ_AI$(c.ch)$
$v \leftarrow (v_{raw} + c.\Delta v) \cdot c.g$
$v \leftarrow \min\{\max\{v, c.v_{\min}\}, c.v_{\max}\}$
$r \leftarrow \dfrac{v - c.v_{\min}}{c.v_{\max} - c.v_{\min}}$
$x \leftarrow c.x_{\min} + r(c.x_{\max} - c.x_{\min})$
`reg`$[c.name] \leftarrow x$
end for
CSV_APPEND_ROW(`reg`)
SLEEP(T_s)
until stopped

Communication between the Raspberry Pi 5 and *ThingSpeak* is carried out using the HTTPS protocol, employing a specific Write API Key for the configured channel and assigning each variable to a designated field within the platform's data structure. Transmission is performed through the POST method with application/x-www-form-urlencoded encoding. To ensure communication integrity, a retry mechanism is implemented in case of transmission errors or invalid responses

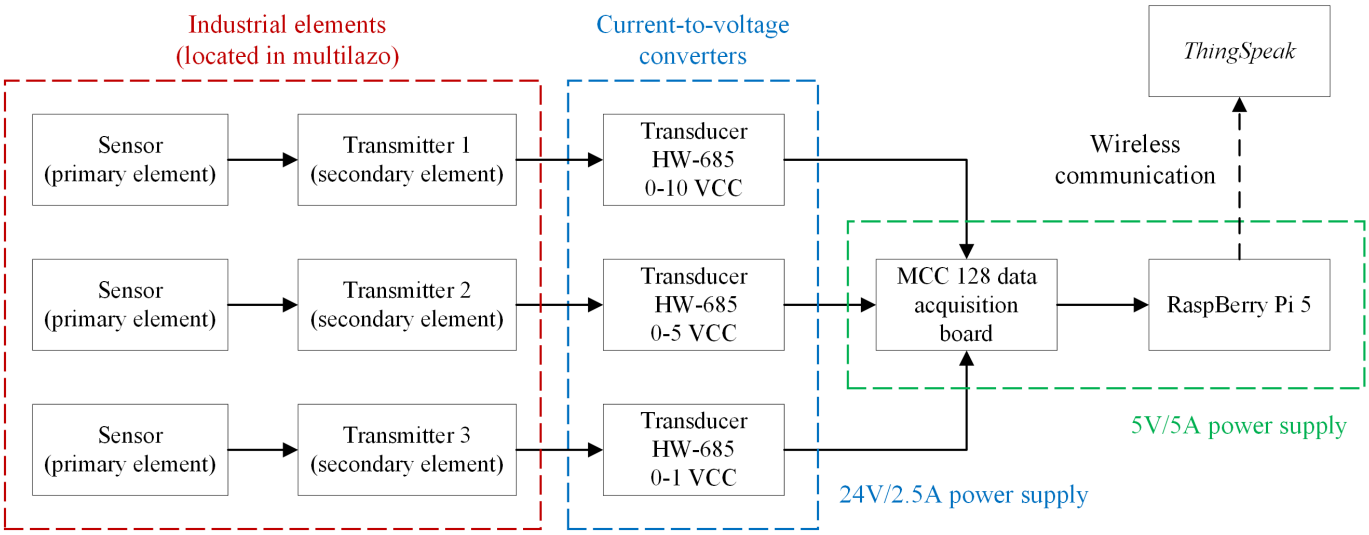

Fig. 1. General structure of the cyber-physical architecture.

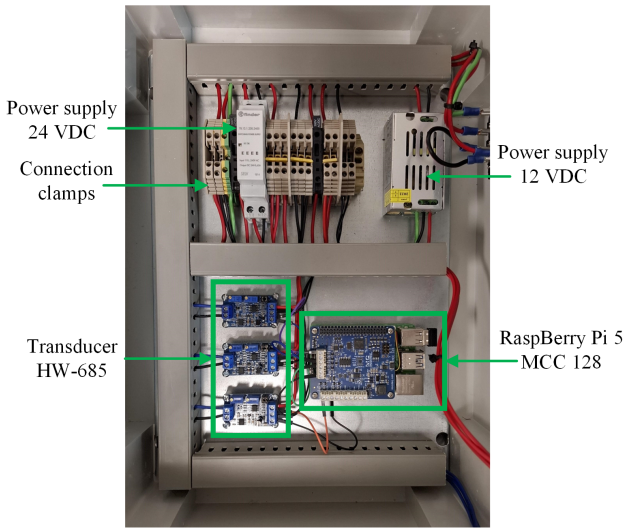

Fig. 2. Physical implementation of the proposed cyber-physical monitoring system, showing the arrangement of its main hardware components within the industrial cabinet.

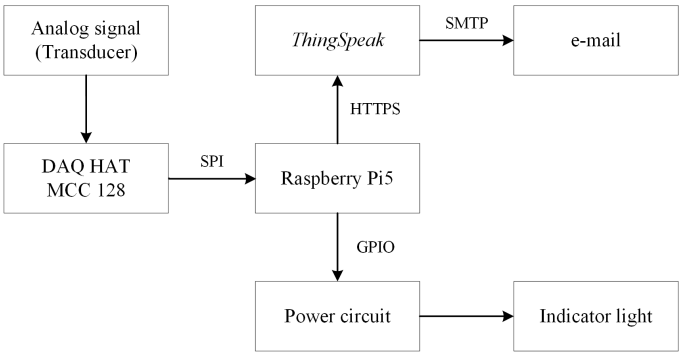

Fig. 3. Communication interfaces and data flow between the acquisition, processing, cloud monitoring, and notification stages of the proposed cyber-physical system.



Fig. 4. Multilazo industrial instrumentation pilot plant used as the experimental test facility for evaluating the proposed monitoring architecture.

from the server.

The pseudocode in Algorithm 2 below describes the transmission process. It includes loading the latest measurement from local storage, constructing the *payload* with the corresponding fields and values, and executing the transmission through the HTTPS connection. It also considers validating the server response and logging success or failure events, in order to ensure traceability and reliability in data publishing. The experimental validation of the cyber-physical system was carried out through the acquisition and transmission of three physical quantities: pressure, level, and temperature, during the operation of the Multilazo industrial instrumentation pilot plant under the conditions encountered in regular academic activities. For the tests, the MCC-128 board was configured in differential mode.

Algorithm 2 ThingSpeak Transmission via HTTPS

```
INIT()
    TS_URL ← "https://api.thingspeak.com"
    TS_KEY ← "WRITE_API_KEY"
    FIELDS ← {PT3 → field1, LE2 → field2, TE2 → field3}
    T_tx ← 15 s                    # free plan minimum interval
    t_last ← 0

LOOP()
    repeat
        t ← NOW()
        if (t − t_last) < T_tx then SLEEP(T_tx − (t − t_last))
    end if
        reg ← CSV_READ_LAST()      # last row written by acquisition
        payload ← {api_key : TS_KEY}
        for each (name → field) in FIELDS
            if reg contains name then payload[field] ← FORMAT(reg[name]) end if
        end for
        ok ← false; retry ← 0; R_max ← 3
        while (ok = false) and (retry < R_max)
            resp ← HTTPS_POST_FORM(TS_URL, payload)
            if (resp.http = 200) and ISNUMERIC(resp.body) then
                ok ← true; t_last ← NOW(); LOG(''TS_OK'', t_last)
            else
                retry ← retry + 1; SLEEP(2 · retry); LOG(''TS_ERR'',retry)
            end if
        end while
    until stopped
```

In the pressure test, a transmitter with a 0–6 bar range was used (see Fig. 5). The comparison between the proposed system and the Multilazo reference measurements showed a maximum absolute difference of 0.01 bar. These differences describe the agreement between the recorded measurements and should not be interpreted as the overall measurement uncertainty of either system. During the evaluated trial, no evident signal disturbances or missing records were identified in the acquired dataset; however, specific tests of data integrity and resistance to external disturbances were not performed.

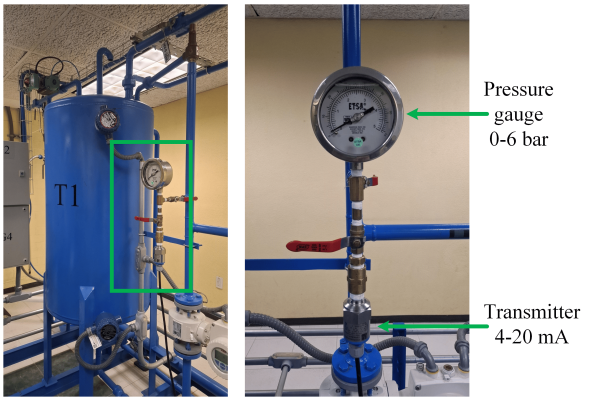

(a)

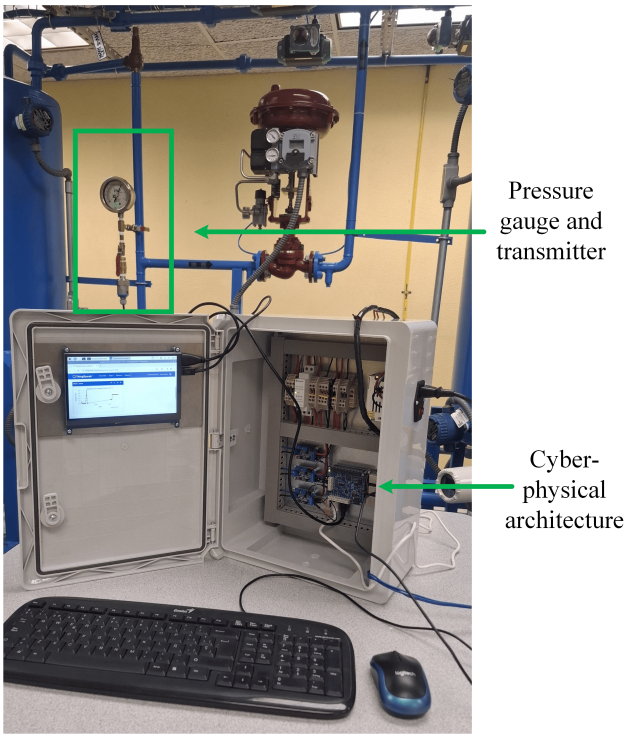

(b)

Fig. 5. Pressure monitoring test. (a) Manometer and transmitter. (b) Cyber-physical system.

The data recorded on the *ThingSpeak* platform were stored, and a preliminary analysis was carried out to confirm proper data reception. Fig. 6 shows the log of the variable corresponding to the pressure transmitter.

As a result of this test, comparisons were made between the pressure measurements acquired by the proposed cyber-physical system and those recorded by the Multilazo monitoring system. The observed agreement supports the ability of the proposed architecture to acquire and transmit pressure measurements under the evaluated conditions, although it does not independently establish the measurement accuracy of the pressure sensor.

Fig. 7 shows the comparative graph between the signal obtained by the proposed system and the signal measured directly in the Multilazo plant. The absolute difference between

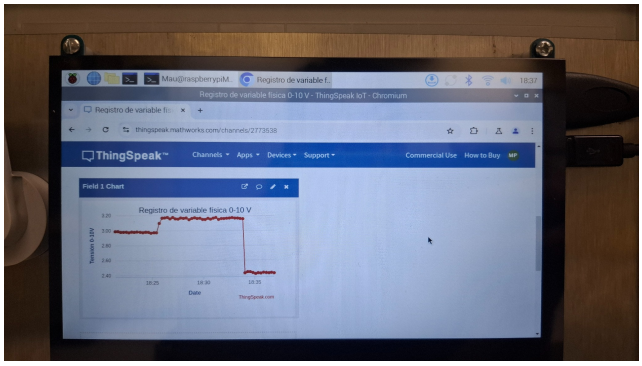

Fig. 6. Time-series visualization of pressure measurements acquired by the proposed system and recorded on the *ThingSpeak* cloud platform.

both measurements is also presented, considering the readings recorded by the Multilazo monitoring system as reference values rather than true values.

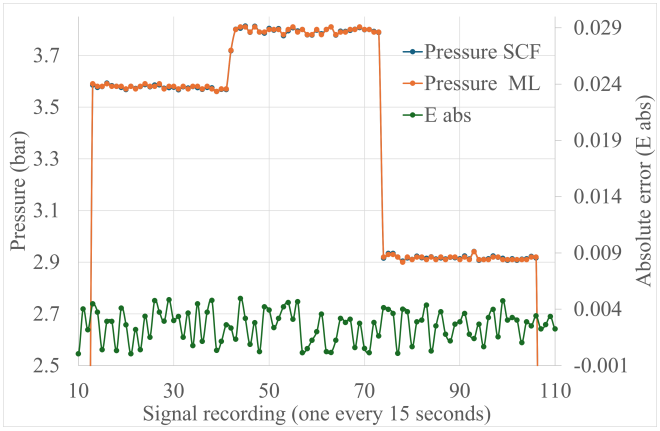

Fig. 7. Comparison of pressure measurements from the proposed monitoring system and the Multilazo reference system, including the absolute measurement difference.

In the level test, a transmitter adjusted to a range of 0–300 L was used. The comparison with the Multilazo reference measurements showed a maximum absolute difference below 0.007 L (see Fig. 8a). The system maintained consistent readings during gradual changes in the monitored variable. In the temperature test, a type J thermocouple with an active transmitter scaled to a range of 20–60 °C was connected. The maximum absolute difference between both monitoring systems was below 0.005 °C (see Fig. 8b).

IV. Results

The experimental evaluation comprised 21 trials of varying duration, during which pressure, level, and temperature were monitored simultaneously under different operating conditions. Thus, in the pressure signal acquisition test, the maximum absolute difference between the proposed system and the Multilazo reference measurements did not exceed 0.01 bar. In the level signal acquisition test, the absolute difference was less than 0.007 L. Finally, in the temperature signal acquisition test, the absolute difference was below 0.005 °C.

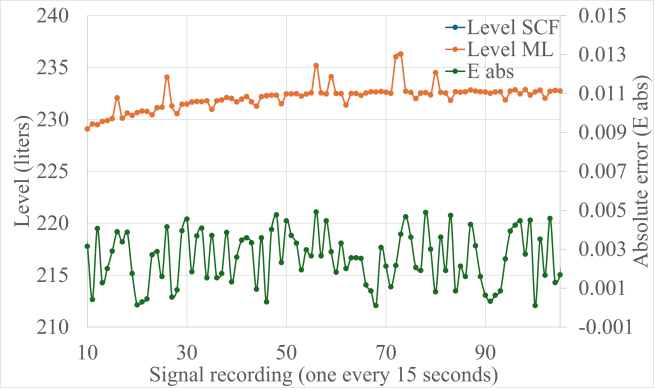

(a)

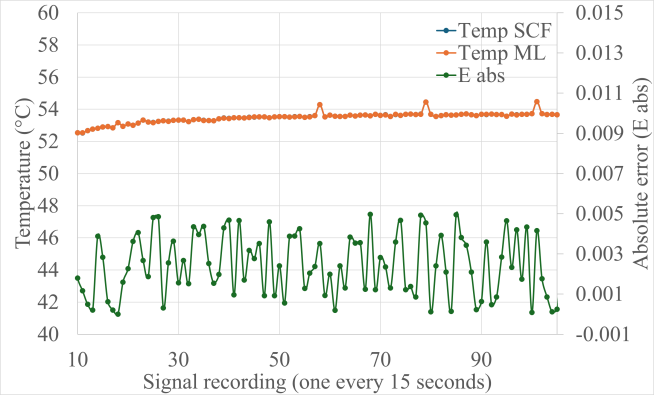

(b)

Fig. 8. Experimental comparison of measurements obtained from the proposed monitoring system and the Multilazo reference system: (a) liquid level and (b) temperature.

The comparison with the Multilazo reference measurements showed a strong correspondence between the recorded signals.

To complement the experimental evaluation with quantitative indicators, one of the 21 trials was selected for detailed analysis. The dataset comprised 116 paired pressure measurements, 116 paired level measurements, and 106 paired temperature measurements. The mean absolute error (MAE), root mean square error (RMSE), mean signed difference (bias), and maximum absolute difference were calculated using the Multilazo readings as comparison references rather than true values. Accordingly, these metrics quantify the differences between the two monitoring systems and should not be interpreted as direct estimates of measurement accuracy. Table I summarizes the results obtained for the three measured magnitudes.

TABLE I
QUANTITATIVE COMPARISON OF MEASUREMENTS BETWEEN THE PROPOSED SYSTEM AND MULTILAZO

Metric	Pressure (bar)	Level (L)	Temperature (°C)
Samples (n)	116	116	106
MAE	0.002696	0.002684	0.002412
RMSE	0.003180	0.003026	0.002851
Bias	-0.000328	-0.000158	+0.000258
Maximum difference	0.008789	0.004917	0.004971

The calculated metrics indicate close agreement between the measurements recorded by both systems during the selected trial. The low MAE and RMSE values indicate small absolute differences, while the bias values show limited mean signed deviations. Nevertheless, these metrics describe the agreement between two monitoring systems and do not independently establish measurement accuracy or uncertainty. Similar behavior was observed qualitatively during the remaining trials, although the statistical indicators reported in Table I were calculated exclusively from the selected dataset.

To evaluate the economic accessibility of the proposed monitoring architecture, a comparison was made with commercial solutions from Siemens, Schneider Electric, National Instruments, and Rockwell Automation. The comparison was based on catalog prices and was intended to provide a general reference of the initial investment associated with different monitoring and automation alternatives, rather than establish equivalence in their technical capabilities. The implemented cyber-physical system, composed of a Raspberry Pi 5, an MCC-128 board, HW-685 transducers, and the *ThingSpeak* platform, has an estimated cost of 450 USD and does not require additional commercial software licenses for its basic operation. In contrast, a Siemens-based solution incorporating an S7-1200, an analog input module, and an IoT2050 device has an estimated catalog cost of 2000 USD, excluding transducers. A Schneider Electric alternative consisting of a Modicon M221 PLC and the EcoStruxure platform has an approximate cost of 1200 USD, excluding the HMI. Similarly, a National Instruments solution incorporating DAQ hardware and associated software has an estimated cost of 1900 USD, excluding additional modules and software licensing. Finally, an Allen-Bradley solution based on a CompactLogix controller and a 1769-IF4 analog input module has an approximate cost of 2100 USD, excluding additional integration requirements. These alternatives differ in functionality, industrial robustness, expandability, and integration capabilities; therefore, the reported prices should be interpreted as indicative investment references rather than directly comparable system costs.

The proposed architecture offers a lower initial investment for applications requiring basic acquisition, storage, and visualization of industrial measurements, particularly in educational environments and micro and small enterprises. However, commercial industrial platforms provide additional capabilities, including advanced control functions, industrial communication protocols, greater robustness, and manufacturer support. Furthermore, the comparison does not establish a lower total cost of ownership, since integration, maintenance, technical support, and long-term operating costs were not evaluated. Therefore, the proposed architecture should be considered an alternative for basic monitoring applications rather than a direct replacement for commercial industrial automation systems.

V. DISCUSSION

The experimental results demonstrate the technical feasibility of the proposed cyber-physical architecture for monitoring industrial DC signals. The comparison with the Multilazo reference system showed small differences between the recorded

measurements of pressure, level, and temperature under the evaluated operating conditions. These results support the ability of the proposed architecture to track the behavior of the monitored variables. However, the observed differences should not be interpreted as a complete assessment of measurement accuracy, since the uncertainty contributions associated with the reference instruments, signal conditioning, and data acquisition stages were not quantified. The differences between the measurements recorded by both systems may arise from several stages of the measurement chain. Sensors and transmitters may introduce errors associated with their measurement characteristics and calibration. The HW-685 current-to-voltage conversion stage may contribute additional offset and gain errors, while the MCC-128 analog-to-digital converter introduces quantization and acquisition-related errors. Furthermore, the software-based offset and gain corrections depend on the calibration parameters applied to each channel. The Multilazo reference measurements are also subject to instrumental uncertainties and recording resolution. Since these contributions were not individually characterized, the observed differences cannot be attributed to a specific component or used to establish the overall measurement uncertainty of the proposed architecture. Previous studies have demonstrated the feasibility of low-cost monitoring architectures based on Raspberry Pi and related technologies in environmental monitoring [14], industrial applications [15], and water-quality monitoring [16].

The Pearson correlation coefficients calculated from the paired measurements of the selected experimental trial exceeded $r = 0.997$ for pressure, level, and temperature. These results indicate a strong linear relationship between the independently recorded signals, although correlation alone does not establish measurement accuracy. The small differences observed between both datasets should also be interpreted considering that the Multilazo software stored measurements with two decimal places, whereas the proposed system retained additional decimal places.

The proposed architecture was designed to operate with standardized industrial analog signal ranges, including 4–20 mA and 1–5 VDC, consistent with ANSI/ISA 50.00.01. This compatibility facilitates the integration of industrial transmitters with the proposed data acquisition system. However, the experimental validation did not include a formal conformity assessment against all requirements of the standard. The estimated implementation cost was 450 USD, reflecting the use of accessible hardware and software without additional commercial licensing requirements.

In terms of reliability, the proposed architecture operated during the experimental trials without reported data losses or evident signal disturbances under the evaluated conditions. These observations provide preliminary evidence of operational continuity during the tests but do not constitute a systematic reliability assessment. Specific tests addressing electromagnetic interference, grounding effects, communication interruptions, and long-term operation were not conducted. Therefore, the reliability of the architecture under more demanding industrial conditions remains to be evaluated. The identified limitations include the 15-second sampling interval, the update restrictions of the free *ThingSpeak* plan, and the absence of industrial communication protocols such as Modbus RTU/TCP or OPC-UA.

These limitations could be addressed in future developments by incorporating industrial communication protocols such as Modbus RTU/TCP or OPC-UA, implementing asynchronous data transmission, and evaluating alternative data storage solutions. Local buffering mechanisms could also be investigated to preserve measurements during temporary network interruptions. However, the effectiveness of these improvements would require additional implementation and experimental validation.

The described architecture could be used beyond the scope of the case study, as it is relatively simple and generic. Its modular design provides the possibility of adapting the signal conditioning and acquisition stages to other industrial transmitters and monitored variables. Potential applications include agricultural, manufacturing, energy, and research environments. However, the experimental validation was limited to pressure, level, and temperature measurements in the Multilazo pilot plant. Therefore, its performance in other applications would require additional experimental evaluation.

VI. Conclusions

This work presents the development, implementation, and experimental validation of a low-cost cyber-physical architecture for monitoring industrial DC signals using open technologies and standardized analog signal ranges. The system enabled local and remote visualization of pressure, level, and temperature measurements acquired from the Multilazo pilot plant. The experimental evaluation, comprising 21 trials under different operating conditions, demonstrated the feasibility of the proposed architecture and a strong correspondence with the measurements recorded by the plant's monitoring system. However, the results do not establish complete metrological accuracy or long-term industrial reliability, since measurement uncertainty and robustness under external disturbances were not evaluated. The modular design provides flexibility for integrating additional instruments and adapting the architecture to other monitoring applications.

Overall, this work contributes to the development of accessible cyber-physical solutions for the acquisition, storage, and visualization of industrial measurements using low-cost hardware and open technologies.

Future work will focus on the experimental characterization of measurement uncertainty, including the contributions of the reference instruments, signal conditioning, and data acquisition stages. Additional evaluations will address long-term operation, electromagnetic disturbances, and communication interruptions. The architecture may also be extended through the integration of industrial communication protocols, additional acquisition channels, a local SCADA interface, and automated calibration and diagnostic functions. Its application to other physical quantities, such as flow, pH, electrical conductivity, vibration, and CO_2 concentration, will require appropriate signal conditioning and experimental validation.

Acknowledgments

The authors express their gratitude to the Instituto Politécnico Nacional (IPN) for providing the institutional

support and facilities that contributed to the development of this research.

REFERENCES

[1] R. Sharma, "Enhancing Industrial Automation and Safety Through Real-Time Monitoring and Control Systems," *J. Smart Sustain. Intell. Comput.*, vol. 1, no 2, pp. 1–20, 2024. DOI: 10.63503/j.ijssic.2024.30.

[2] A. Aderamo, H. Olisakwe, Y. Adebayo, A. Esiri, "AI-enabled predictive safeguards for offshore oil facilities: Enhancing safety and operational efficiency.," *Compr. Res. Rev. Eng. Technol.*, vol. 2, no 1, pp. 23-43, 2024. DOI: 10.57219/crret.2024.2.1.0060.

[3] E. Peterson, A. Lavin, "Physical computing for materials acceleration platforms," *Matter*, vol. 5, no 11, pp. 3586-–3596, 2022. DOI: 10.1016/j.matt.2022.09.022.

[4] L. Kumar, R. K. Sharma, "Exploring Research Issues and Potential Future Directions in Industry 4.0 Adoption in SMEs: A Comprehensive Analysis and Integration," *FIIB Business Review*, 2023. doi: 10.1177/23197145231203512.

[5] k. Niehaus, A. Westhoff, "An open-source data acquisition system for laboratory and industrial scale applications," *Meas. Sci. Technol.*, vol. 34, no 2, pp. 1–6, 027001, 2022. DOI 10.1088/1361-6501/ac9994.

[6] J. Jolles, "Broad-scale applications of the Raspberry Pi: A review and guide for biologists," *Methods Ecol. Evol.*, vol. 12, no 9, pp. 1562–1579, 2021. DOI: 10.1111/2041-210X.13652.

[7] A. Martikkala, J. David, A. Lobov, M. Lanz, "Trends for low-cost and open-source IoT solutions development for industry 4.0," *Proc. Manuf.*, vol. 55, pp. 298–305, 2021. DOI: 10.1016/j.promfg.2021.10.042.

[8] M. Gushev, "Dew computing architecture for cyber-physical systems and iot," *Internet Things*, vol. 11, pp. 1–9, 100186, 2020. DOI: 10.1016/j.iot.2020.100186.

[9] K. Feichtinger, K. Meixner, F. Rinker, I. Koren, H. Eichelberger, T. Heinemann, J. Holtmann, M. Konersmann, J. Michael, E.-M. Neumann, J. Pfeiffer, R. Rabiser, M. Riebisch, K. Schmid, "Industry voices on software engineering challenges in cyber-physical production systems engineering," in *IEEE 27th Int. Conf. Emerg. Technol. Factory Autom.*, Stuttgart, Germany, 2022, pp. 1–8. DOI: 10.1109/ETFA52439.2022.9921568.

[10] C. C. Chung, S. J. Lou, "Physical computing strategy to support students coding literacy: An educational experiment with arduino boards," *Appl. Sci.*, vol. 11, no 4, pp. 1–18, 2021. DOI: 10.3390/app11041830.

[11] T. Chen, L. Xu, K. Zhu, "Fritzbot: A data-driven conversational agent for physical-computing system design," *Int. J. Hum.-Comput. Stud.*, vol. 155, pp. 1–15, 2021. DOI: 10.1016/j.ijhcs.2021.102699.

[12] I. Ullah, R. K. Haldkar, I. A. Parinov, "Prioritizing the Barriers to the Adoption of Cyber-Physical Systems in Manufacturing Organizations Using Fuzzy AHP," in *Physics and Mechanics of New Materials and Their Applications*, Springer Proceedings in Materials, vol. 20, Springer, Cham, 2023. doi: 10.1007/978-3-031-21572-8_49.

[13] X. Bampoula, G. Siaterlis, N. Nikolakis, K. Alexopoulos, "A deep learning model for predictive maintenance in cyber-physical production systems using lstm autoencoders," *Sensors*, vol. 21, no 3, pp. 1–14, 2021. DOI: 10.3390/s21030972.

[14] A. Lewis, M. Campbell, P. Stavroulakis, "Performance evaluation of a cheap, open source, digital environmental monitor based on the Raspberry Pi," *Meas.*, vol. 87, pp. 228–235, 2016. DOI: 10.1016/j.measurement.2016.03.023.

[15] G. Song, J. Ou, Y. Cao, Y. Wang, "An energy auditing system based on learnable positional embedding and edge computing for in-situ monitoring of 3D printing processes," *Int. J. Adv. Manuf. Technol.*, vol. 139, no 2, pp. 3493—3509, 2025. DOI: 10.1007/s00170-025-16098-2.

[16] P. Khatri, K. Gupta, R. Gupta,, "Raspberry Pi-based smart sensing platform for drinking-water quality monitoring system: a Python framework approach," *Drink. Water Eng. Sci.*, vol. 12, no 1, pp. 31–37, 2019. DOI: 10.5194/dwes-12-31-2019.

[17] K. Xu, Y. Li, C. Liu, X. Liu, X. Hao, J. Gao, P. Maropoulos, "Advanced Data Collection and Analysis in Data-Driven Manufacturing Process," *Chin. J. Mech. Eng.*, vol. 33, pp. 1–21, 2020. DOI: 10.1186/s10033-020-00459-x.



Pérez-Romero, M. A. received the B.Eng. degree in Control and Automation Engineering from the Instituto Politécnico Nacional (IPN), Mexico, the M.Sc. degree in Computer Technology from the Centro de Innovación y Desarrollo Tecnológico en Cómputo (CIDETEC-IPN), and the Ph.D. degree in Mechanical Engineering Sciences from the Sección de Estudios de Posgrado e Investigación (SEPI), Escuela Superior de Ingeniería Mecánica y Eléctrica (ESIME Zacatenco), IPN, Mexico. He is currently a Professor at ESIME Zacatenco, IPN. His research interests include industrial automation, image processing, cyber-physical systems, and the Industrial Internet of Things (IIoT). He has experience in supervising undergraduate theses, developing low-cost monitoring systems, and implementing advanced control strategies in robotic and industrial applications.



Sandoval-Gutiérrez, J. graduated at the Escuela Superior de Ingeniería Mecánica y Eléctrica (ESIME) from Instituto Politécnico Nacional (IPN) in Mexico City, Engineer Industrial Robotics in 2004 and later as Master and Doctor of Advanced Technology at the Centro de Investigación en Ciencia Aplicada y Tecnología Avanzada CICATA) from IPN in 2006 and 2010 respectively. He is a research professor at the Universidad Autónoma Metropolitana Unidad Lerma, Estado de México, Mexico. He has published several articles related to the field of robotics, as well as patents in the area of Engineering. He has directed and participated in various research and technological development projects and belongs to the National System of Researchers of México.



Hernández-Bolaños M. received the B.S. degree in electronics engineering from Escuela Superior de Ingeniería Mecánica y Eléctrica (ESIME), Instituto Politécnico Nacional (IPN), Mexico City, Mexico, in 1997, and the M.S. degree in computing technology from the Centro de Innovación y Desarrollo Tecnológico en Cómputo, IPN (CIDETEC-IPN), Mexico, in 2009. He has been a Professor and a Researcher at CIDETEC-IPN, since 1998. He has also been an advisor of several postgraduate students and the leader of research projects at IPN. He has been author and co-author of different scientific articles. His research interests include electronics, intelligent computing and embedded systems.